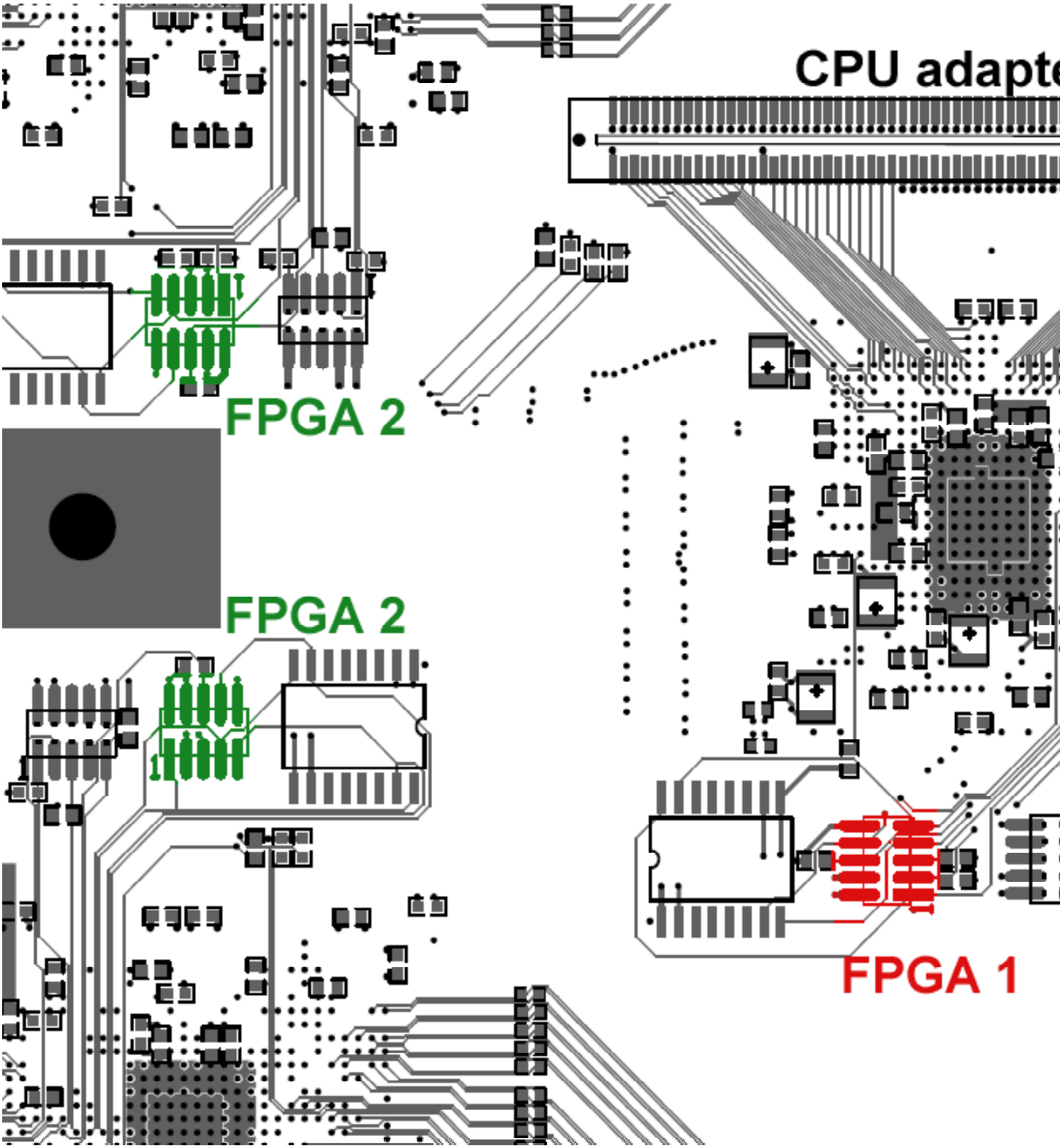
CPU adapte
FPGA 2
FPGA 2
FPGA 1